REVISIONS				
ZONE	REV.	DESCRIPTION	DATE	APPROVED

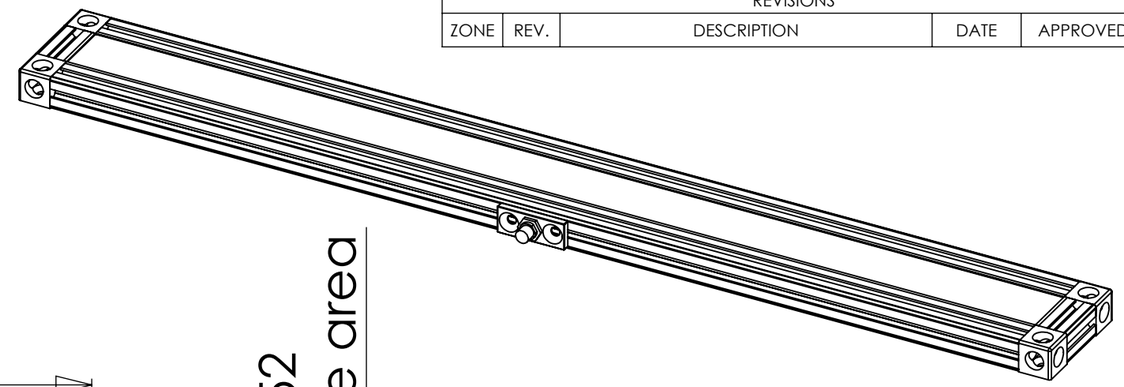

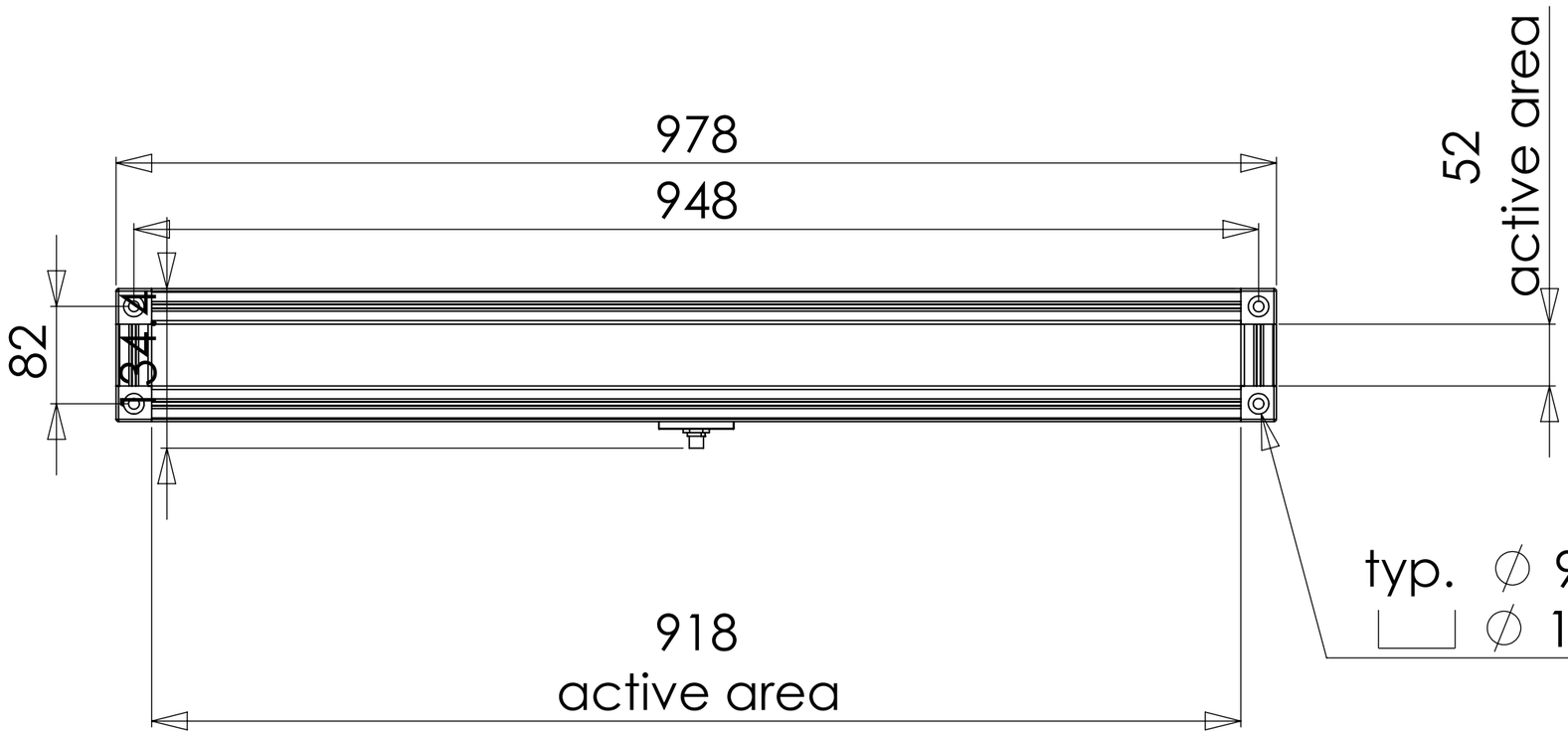

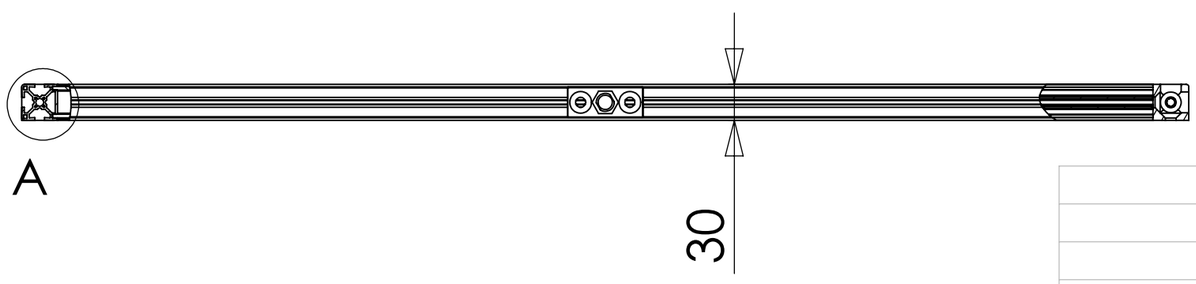

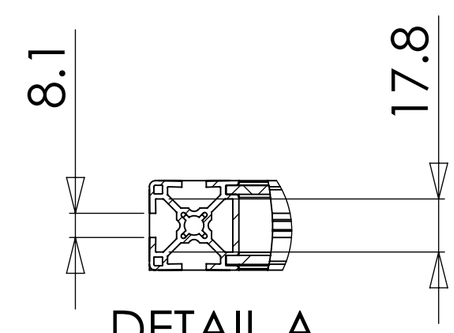

DETAIL A
SCALE 1 : 2

PROPRIETARY AND CONFIDENTIAL

THE INFORMATION CONTAINED IN THIS DRAWING IS THE SOLE PROPERTY OF SmartVisionLights. ANY REPRODUCTION IN PART OR AS A WHOLE WITHOUT THE WRITTEN PERMISSION OF SmartVisionLights IS PROHIBITED.

NEXT ASSY	USED ON
APPLICATION	

UNLESS OTHERWISE SPECIFIED:

DIMENSIONS ARE IN MM
TOLERANCES:
FRACTIONAL ±1-64
ANGULAR: MACH ±.25° BEND ±3°
TWO PLACE DECIMAL ±.10 mm
THREE PLACE DECIMAL ±.01 mm

INTERPRET GEOMETRIC TOLERANCING PER:

MATERIAL

FINISH

	DATE	NAME
DRAWN BY	1/23/2012	
CHECKED		
ENG APPR.		
MFG APPR.		
Q.A.		

COMMENTS:

SOBL-900x50

SmartVisionLights.Com

matt@smartvisionlights.com

SIZE	DWG. Name	REV
B	SOBL-900x50	
SCALE: 1:5		SHEET 1 OF 1

Path: \\NETGEAR_NAS\CAD_data\2009\SVL\09394 sobl lights\900 x 50\